REVISION HISTORY				
ZONE	REV	DESCRIPTION	DATE	APPROVED
	-	INITIAL RELEASE	2019/10/27	HHMI\\arnoldj

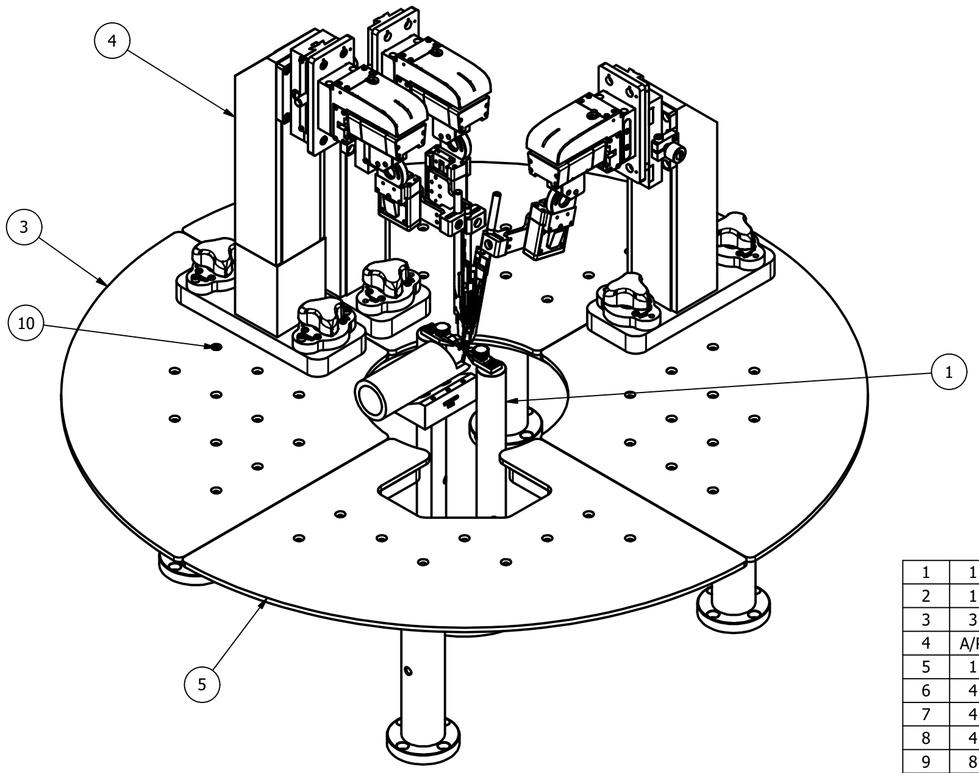

1	1	PTR V2 HEAD POST AND MOUNTING BARS.iam	J008192	HHMI: JRC - ID&F	PTR V2 HEAD POST AND MOUNTING BARS	N/A	N/A
2	1	PTR RAISED PLATFORM.ipt	J006218	HHMI: JRC - ID&F	PTR RAISED PLATFORM	N/A	N/A
3	3	PTR MBASE.ipt	J007478	HHMI: JRC - ID&F	MAGNETIC BASE FOR MANIPULATORS	N/A	N/A
4	A/R	PTR V2 MANIPULATOR ASSEMBLY.iam	J008190	HHMI: JRC - ID&F	MANIPULATOR ASSEMBLY	N/A	N/A
5	1	PTR MBASE CUTOUT.ipt	J007541	HHMI: JRC - ID&F	PTR MBASE CUTOUT	N/A	N/A
6	4	PB1.ipt	PB1	THORLABS	MOUNTING POST BASE, 2.48" DIA	N/A	N/A
7	4	P6.ipt	P6	THORLABS	1.5" DIA POST, 6" L	N/A	N/A
8	4	P1.ipt	P1	THORLABS	1.5" POST, 1" L	N/A	N/A
9	8	MCMASTER 92196A539 0_25 x 0_625 SHCS SS.ipt	92196A539	MCMASTER	SHCS, 1/4-20 X 5/8"	N/A	N/A
10	A/R	MCMASTER 91771A199_8-32 x 1 L FHPS SS.ipt	91771A199	MCMASTER	SCREW, FLAT HEAD PHILLIPS, 8-32 x 1" L, SS	N/A	N/A
11	A/R	MCMASTER 90631A009_8-32 LOCKNUT.ipt	90631A009	MCMASTER	8-32 LOCKNUT, STEEL	N/A	N/A
12	4	MCMASTER 92313A540 0_25 x 0_75 SHSS SS.ipt	92313A540	MCMASTER	SET SCREW, 1/4-20 X 3/4"	N/A	N/A
ITEM	QTY	FILE NAME	PART NUMBER	VENDOR	DESCRIPTION	A.I. PART #	A.I. VENDOR

PARTS LIST

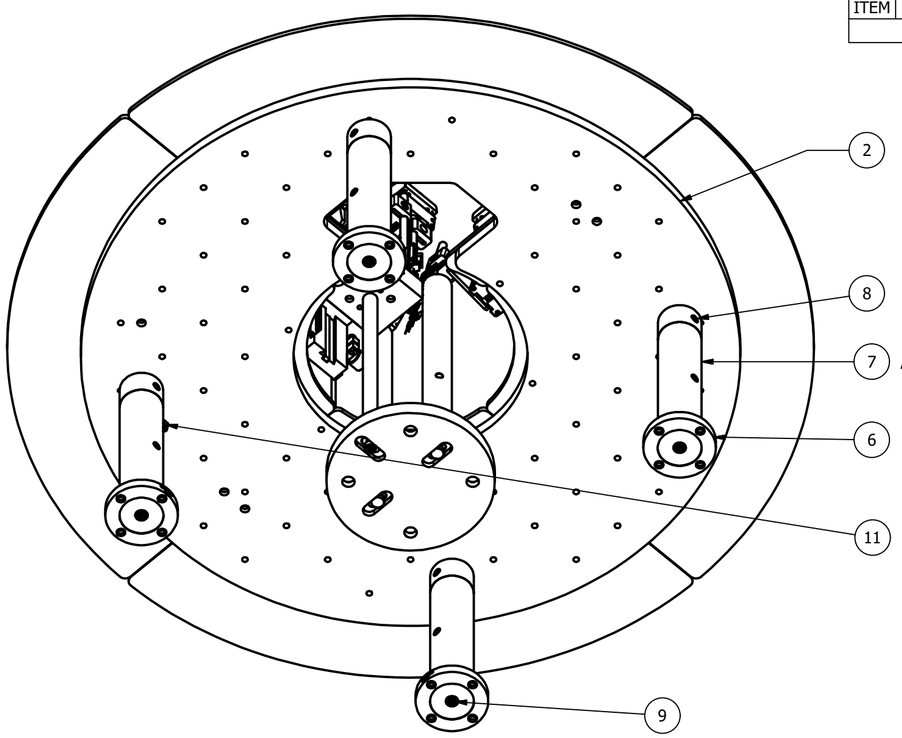

NOTICE:
INFORMATION CONTAINED IN THIS DOCUMENT OR ANY REPRODUCTION THEREOF, IS PROPRIETARY INFORMATION AND PROPERTY OF HOWARD HUGHES MEDICAL INSTITUTE. IT SHALL NOT BE DISCLOSED, COPIED, DUPLICATED OR USED FOR MANUFACTURE, PRODUCTION OR PROCUREMENT, WITHOUT THE EXPRESS WRITTEN PERMISSION OF HOWARD HUGHES MEDICAL INSTITUTE.

(UNLESS SPECIFIED OTHERWISE)
PRIMARY UNITS: INCHES
[SECONDARY UNITS]: MILLIMETERS

PRIMARY TOLERANCES:

X.X	± 0.020
X.XX	± 0.010
X.XXX	± 0.005
X.XXXX	± 0.0005
ANGULAR	± 0.5 DEG

- DO NOT SCALE DRAWING -

THIRD ANGLE PROJECTION:

hhmi Howard Hughes Medical Institute

hhmi janelia Research Campus

PTR V2 MANIPULATOR PLATFORM TOP LEVEL ASSY.iam

SIZE	PART NUMBER	REV	SHEET
C	J008196	-	1 OF 1